Laser Distance Sensors E-Series

Type EAH-10-M1-B21

Part No.: 500731



Unmatched Precision: Accuracy ±0.5 mm @ ±1σ and ±1 mm @ ±2σ including internal thermal drift compensation from -10...60 °C

Dimetix Technology: Two measurement principles (TOF & phase shift) combined for fast and reliable results on any surface

Precision Targeting: Small laser spot for exact alignment in high-precision applications

Compact & Lightweight: Only 360 g – easy to integrate, even in confined spaces

Further types available: Check www.dimetix.com for PROFINET®, EtherNet/IP™, EtherCAT®, SSI

SPECIFICATION

Typical accuracy @ ±1σ	±0.5 mm
Typical accuracy @ ±2σ	±1 mm
Typical repeatability @ ±1σ	±0.15 mm
Typical repeatability @ ±2σ	±0.3 mm
Measuring range on natural surfaces	0.05...~100 m
Measuring range on orange Dimetix reflective foil	~0.5...200 m
Max. measuring rate	100 Hz
Max. output rate	100 Hz
Light source	Laser red, typ. 655 nm
Laser class	Class 2 (<1mW, IEC 60825-1)
Typical diameter of laser dot @ 10, 50, 100 m	12 x 4.5 mm; 58 x 17 mm; 95 x 32 mm
Operating temperature	-10...60 °C
Storage temperature	-40...70 °C
Relative humidity (operation/storage)	Up to 85% (RH), non condensing
Degree of protection	IP65
Shock & vibration	IEC 60068-2-27 / 60068-2-6
Power supply	12...30 VDC (0.15A @ 24 VDC)
Dimension (L x W x H)	144 x 78 x 48 mm
Weight	360 g
Electromagnetic compatibility (EMC)	IEC/EN 61000
Material main sensor body	Aluminium Alloy EN-AW 6060 (Anodized 20 um)
Material front / back cover	Mineral reinforced nylon resin

INTERFACES

Analog output, programmable	0/4...20 mA (16Bit)
Max. error analog output	±0.1%
Multi functional digital IO1 (NPN, PNP, Push-Pull)	Input / Output / Error
Multi functional digital IO2 (NPN, PNP, Push-Pull)	Input / Output / Error
Serial Interfaces	RS-232, RS-422 / 485 / SSI
USB-C for configuration only (Bus powered)	✓
Bluetooth LE V6.0	✓

CONNECTION

Connection	Screw Terminal

Revision: 1.00 / 11.2026

Please consult the Technical Reference Manual for the confirmed specification.
Subject to change without notice. Further our General Terms and Conditions of Sale and Supply ("GTC") are valid.

Dimetix AG • Degersheimerstr. 14 • 9100 Herisau • Switzerland • Phone +41 71 353 00 00 • info@dimetix.com • www.dimetix.com

Drawings

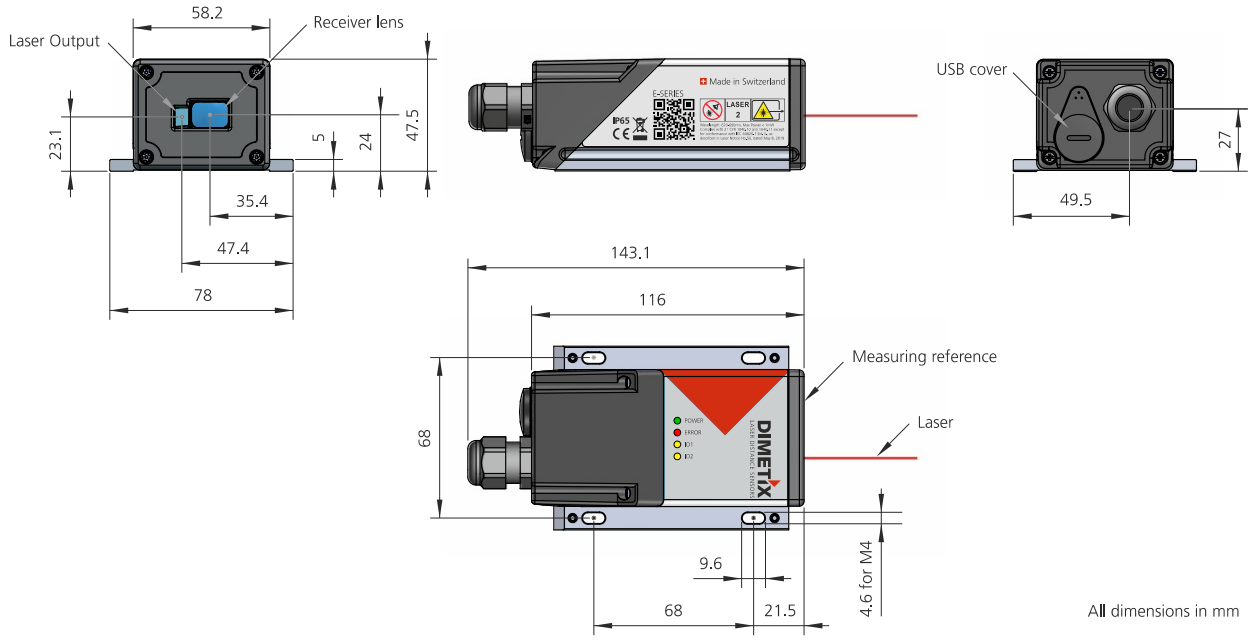

All dimensions in mm

Connection Interface

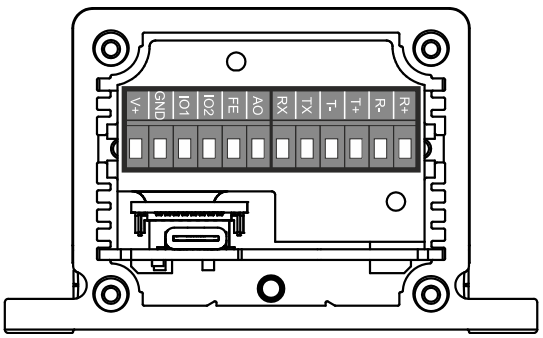

Name	Description
V+	Power supply V+ / VCC
GND	Power supply GND / 0 V / V-
IO1	Digital input / output 1
IO2	Digital input / output 2
FE	Functional earth / Sensor housing
AO	Analog output 0 / 4...20 mA
RX	RS-232 receive data
TX	RS-232 transmit data
T-	RS-422 / RS-485 / SSI transmit data- / data-
T+	RS-422 / RS-485 / SSI transmit data+ / data+
R-	RS-422 / RS-485 / SSI receive data- / clock-
R+	RS-422 / RS-485 / SSI receive data+ / clock+

Please consult the Technical Reference Manual for the confirmed specification.
Subject to change without notice. Further our General Terms and Conditions of Sale and Supply ("GTC") are valid.